Swing-Over Parlour
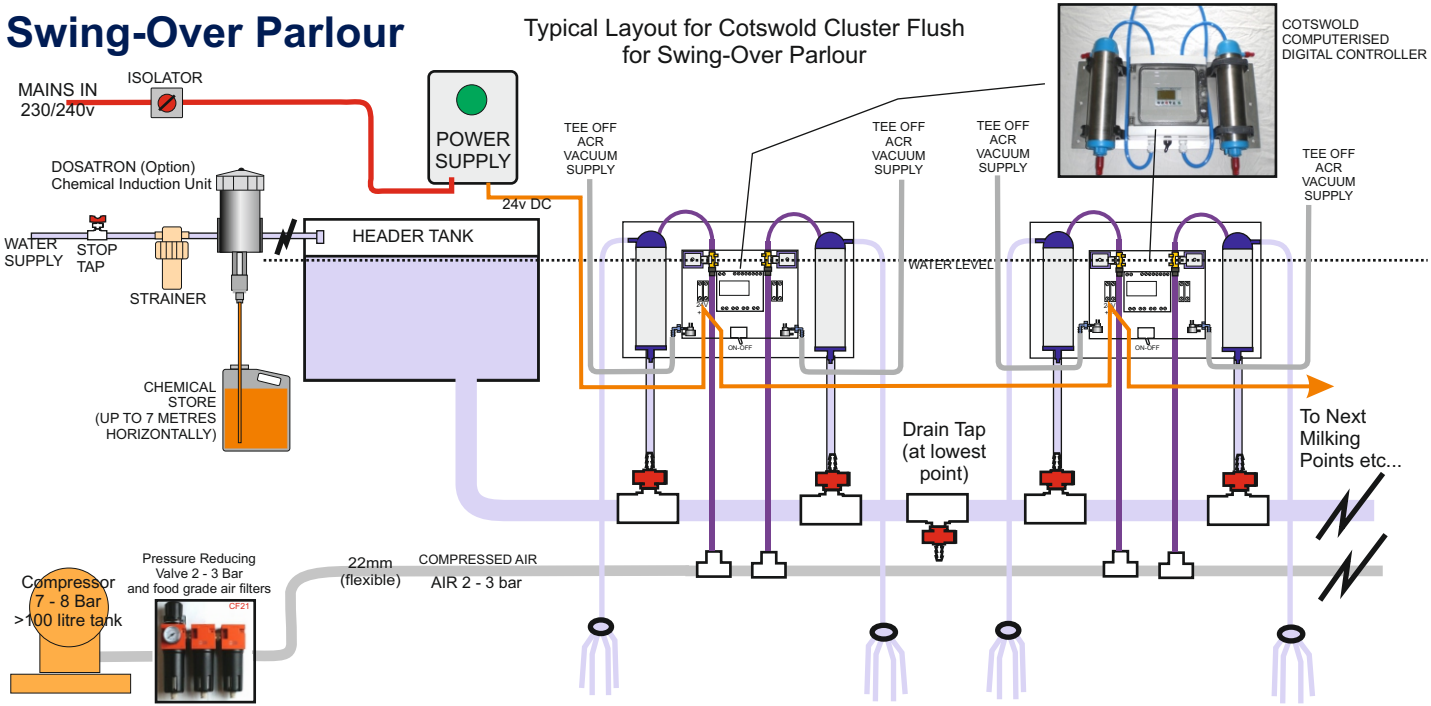
Typical Layout for Cotswold Cluster Flush
for Swing-Over Parlour