48-HOUR DAIRY WATER HEATER TIMER (Single Phase)

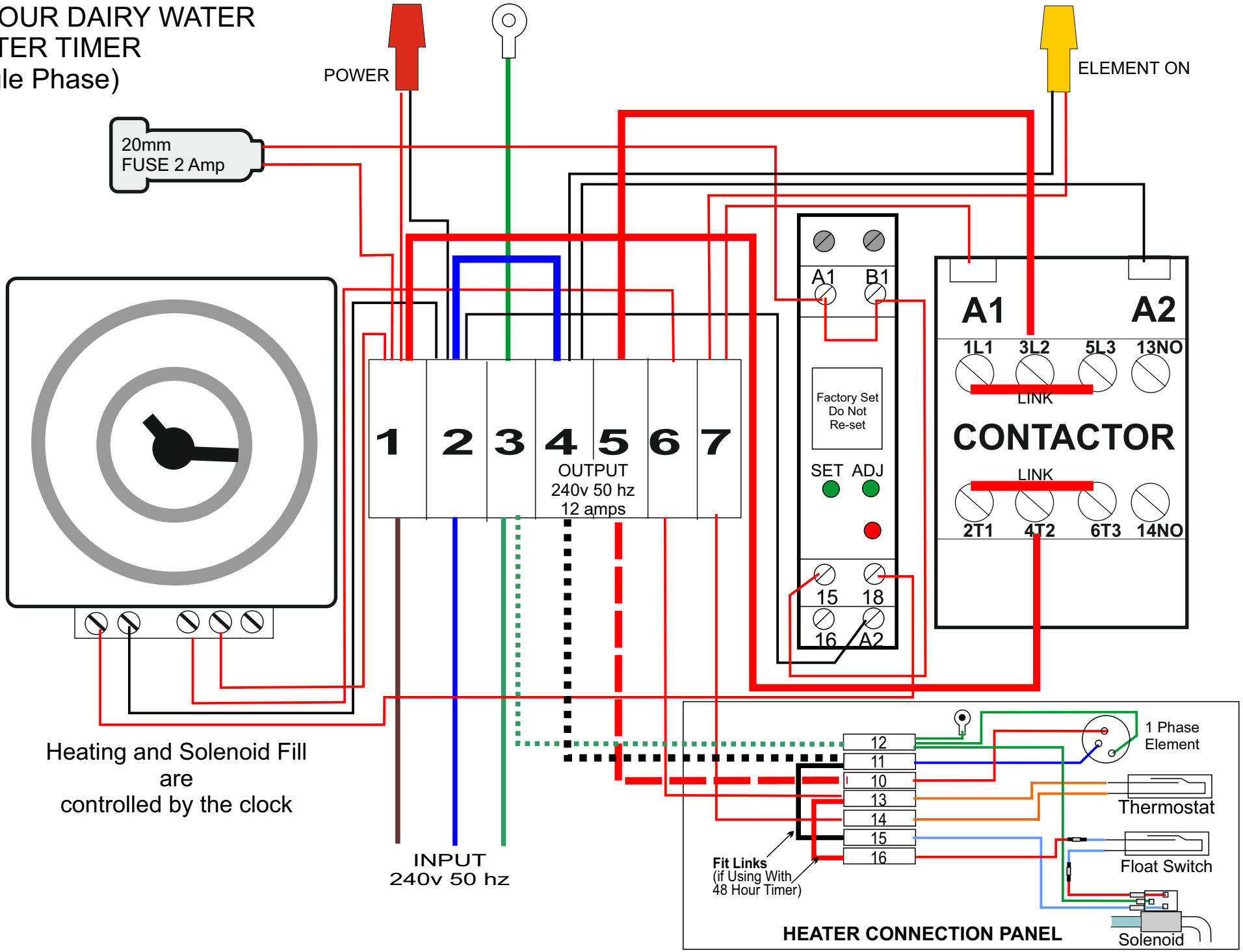

48HOURCLOCKCIRCUIT-COTSWOLD.cdr